Rev Ind	Revision	Appd	Date
I	Redrawn	FS	00 27

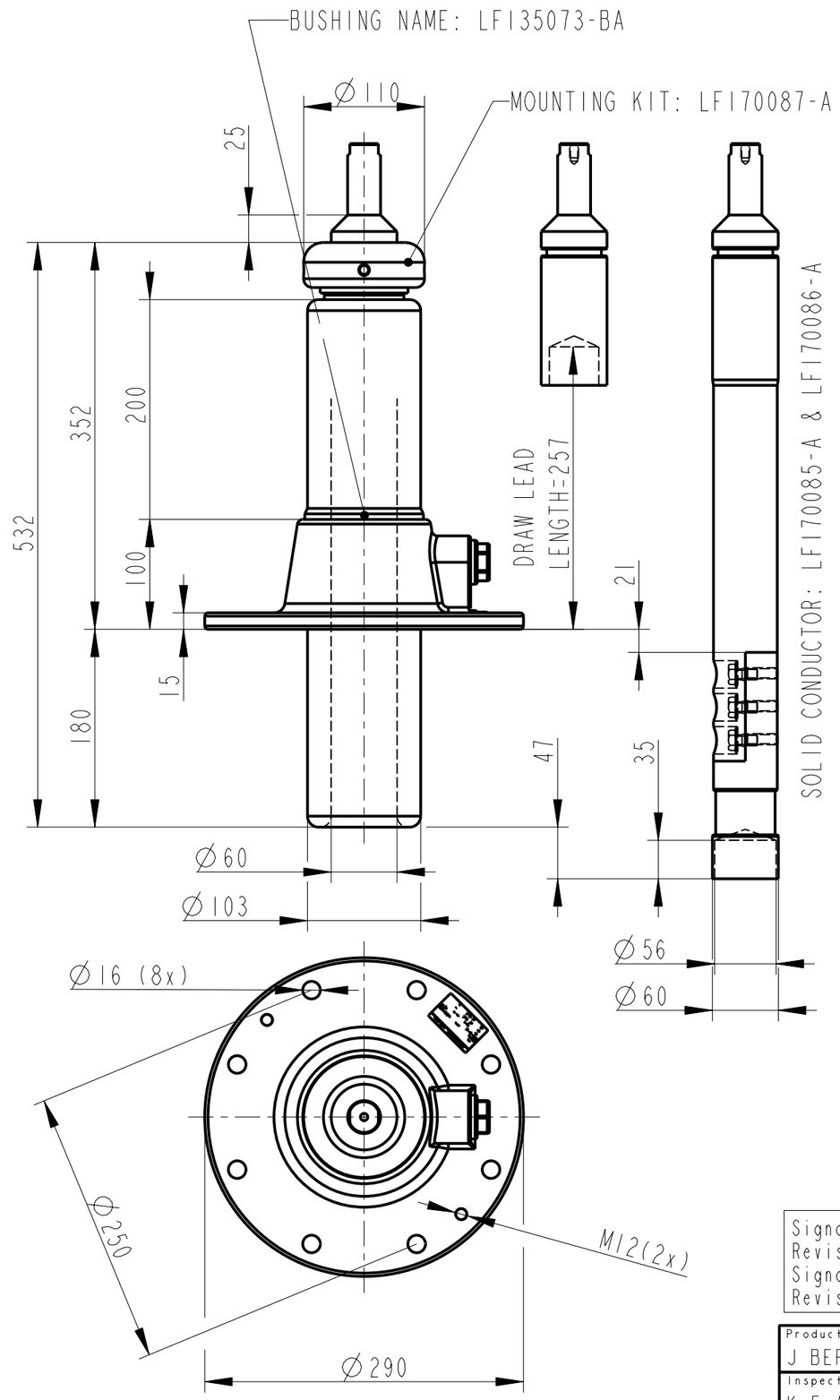

CATALOGUE No	TERMINAL
KATALOG Nr	D_CABLE
LFI70084-A	5.0
LFI70084-B	11.0
LFI70084-C	13.0
LFI70084-D	15.0
LFI70084-E	18.0
LFI70084-F	30.0
LFI70084-G	42.0
LFI70084-H	45.0
LFI70084-I	50.0
LFI70084-J	54.0

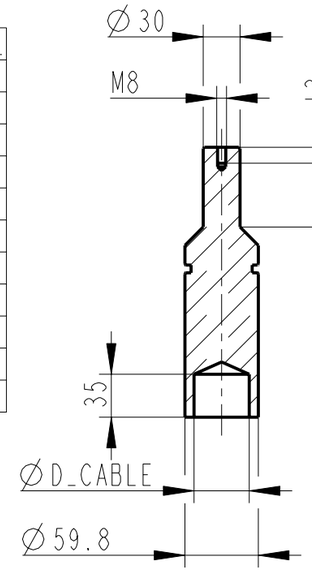

ELECTRICAL DATA, according to IEC 137		
Ratings	Rated voltage	73 kV
	Max phase to earth voltage, temporary	73 kV
	Max current with Cu-conductor	2500 A
	Max current with stranded cable 1200mm^2	1600 A
	Dry lightning impulse	350 kV
	Chopped lightning impulse	403 kV
Routine test	Dry power frequency	160 kV
Capacitance	Nominal capacitance	163 pF
GENERAL DATA, according to IEC 137		
Mass	Mass bushing	7 kg
Cantilever load	Cantilever test load, heavy load	3150 N
	Max cantilever operating load, bushing	1575 N
Temp class	Temperature class	CLASS 2
Mounting and service instructions		2750 515-138
ELECTRICAL DATA, according to ANSI C57.19.00		
Ratings	Insulation class	69 kV
	Rated max. line to ground voltage	44 kV
	Max current with Cu-conductor	2500 A
	Max current with stranded cable 1200 mm^2	1600 A

ABB Components **Ludvika, Sweden**

GSA73-00/2500/0 LFI35073-BA

No.

Ur/Uy 73/73 kV Ir 2500 A 50/60 Hz

LI / SI / AC 350/-/160 kV

M 7 kg L 180 mm V 0-90

C1 pF Tan δ %

C2 pF Tan δ %

Signatures acc. to Revision 0 are valid
Signaturer enligt Revision 0 gäller

Based on	Reg. No.	Title	
Prepared: F STÅHLE	Responsible department: COM/BK 9905	OIL-OIL BUSHING GSA73-00/2500/0	
Production engineering review: J BERNER	Approved: H JOHANSSON	Take over department	Language: 82
Inspection engineering review: K-E ANDERSSON	Revision	Database: BUSHINGS	Page: 1(1)
Design engineering review: F PETRICI	ABB Components	Document No. 2751365-BA	

We reserve all rights in this document and in the information contained therein. Reproduction, use or disclosure to third parties without express authority is strictly forbidden. ©ABB